Pump front bearing

Pump front bearing Serie 25406 - 25606
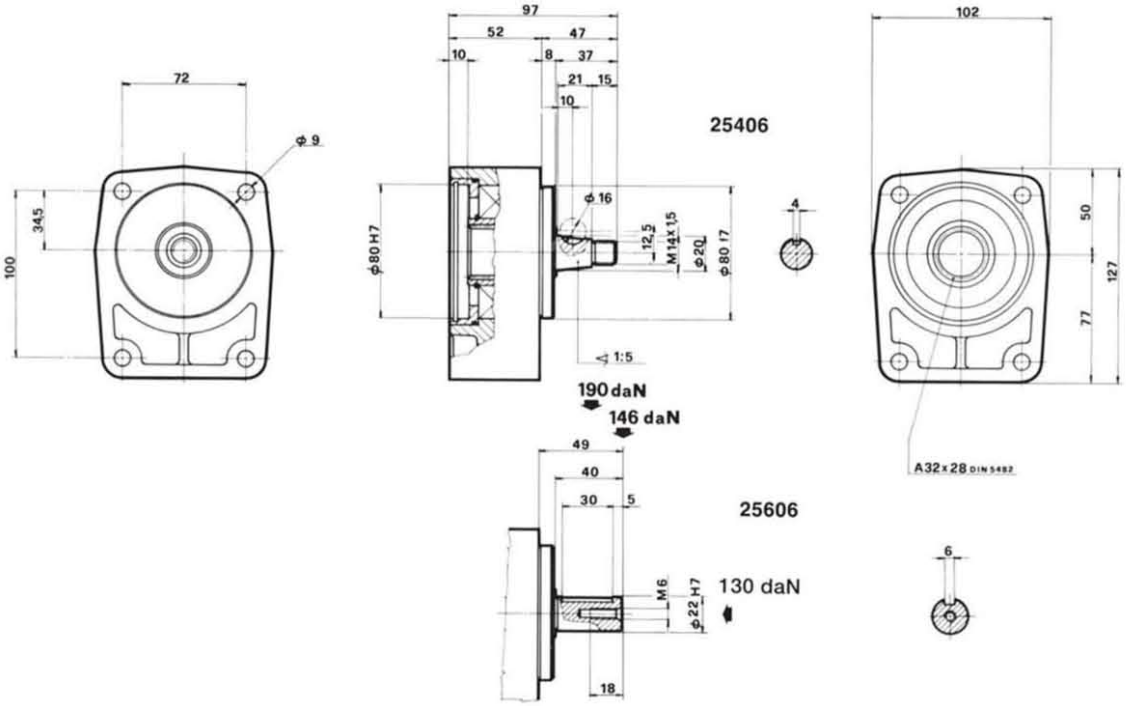
Inlet pump flange Gr. 2 Bosch
Inlet centering diam. 80 mm.
Outlet centering diam. 80 mm.
Outlet tapered shaft 20 mm. diam. (25406)
Outlet parallel shaft 22 mm. diam. (25606)