MONOBLOCCO A-B LATERALI 3/8" P-T 1/2" BSP
MONOBLOCK A-B ON SIDE 3/8" P-T 1/2" BSP

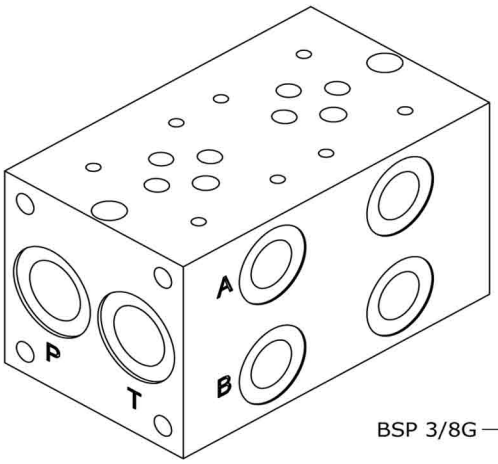

Schema idraulico
Hydraulic diagram

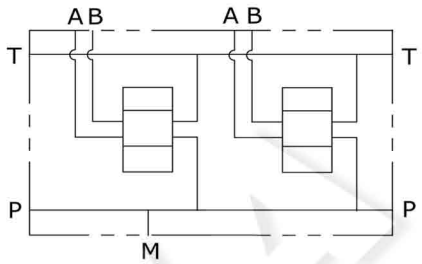

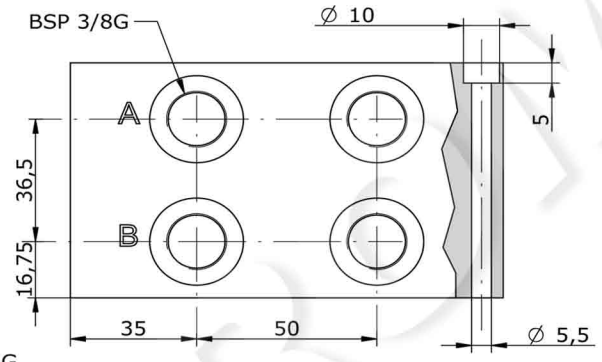

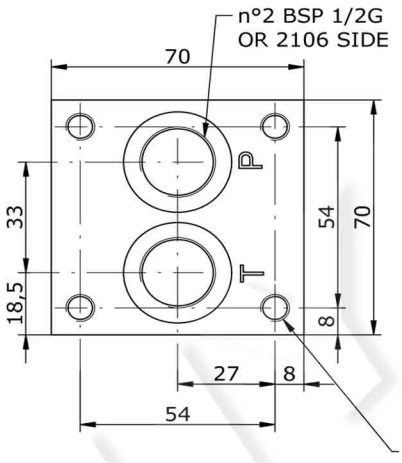

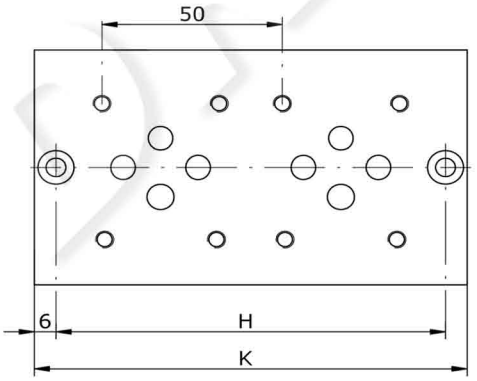

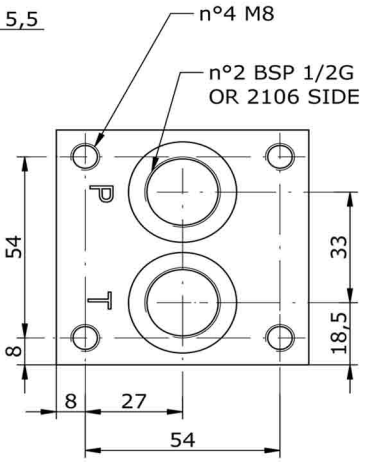

POS.	01	02	03	04	05	06	07	08	09	10
H	58	108	158	208	258	308	358	408	458	508
K	70	120	170	220	270	320	370	420	470	520

E_ 06 - 12 - 38 - __

S = STEEL
A = ALUMINUM

MOUNTING POSITIONS: 01÷ 10