Part number:

HYDROMA HYDRAULICKÉ SYSTÉMY | HIDROMA SISTEMS UKŁADY HYDRAULICZNE | HYDROMA ГИДРАВЛИЧЕСКИЕ СИСТЕМЫ

3/2 ways/positions flow diverters

RE 18302-01/12.09

L700... (VS70)

Size 4
Series 00
Maximum operating pressure 310 bar *[4500 psi]*
Maximum flow 20 l/min *[5.3 gpm]*
Ports G 1/4

Summary

General specifications

- 3 way 2 position valve.
- Directional spool valve with direct solenoid control.
- Upon request, hydraulic / pneumatic pilot , or manual push and twist control.
- Control spool operated by screwed-in solenoid, with easily extractable coil fastened by a ring nut.
- Wet pin tube for DC coil, with push rod for mechanical override in case of voltage shortage.
- Unrestricted 360° orientation of DC coil.
- Control spool held in normal position by return spring.
- Optional manual override (push-button or screw type).
- Connectors available: DIN 43650 – ISO 4400, AMP Junior, DT04-2P (Deutsch), Free leads

Ordering details

L	7	0 0	2	_ _	_ _	_	_ _	_ _	0

Family
Compact directional valve

Type
Flow Diverters

Ports
G 1/4 DIN3852

Control type

Solenoid (coil C36) without emergency	= 10
Solenoid (coil C36) with push-button type emergency	= 1P
Solenoid (coil C36) with screw type emergency	= 1F
Hydraulic / pneumatic control	= P1

Spool variants

Transitory position closed	= 3A
Transitory position open	= 3N

Drain type

Internal drain	= I
External drain	= E

Electric connections

00 =	Without coil
01 =	With coil, without connector
02 =	With coil and with non-assembled connector, type DIN 43650 – ISO 4400
03 =	With coil having AMP Junior connector
04 =	With coil having AMP Junior Horiz. connector
07 =	With coil having DEUTSCH DT 04-2P connect.
31 =	With coil and bipolar sheathed lead 350mm *[13.8"]* long

Voltage supply

	31	07	04	03	02	01	00	
00 =							■	Without coil
OB =	■	■	■	■	■	■		12V DC
AD =		■			■	■		13V DC
OC =	■	■	■	■	■	■		24V DC
AC =		■			■	■		27V DC
OD =			■		■	■		48V DC
OE =					■	■		110V DC

Available connections

Spool variants

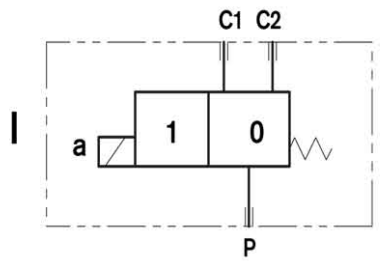

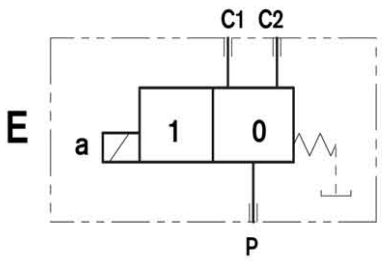

Principles of operation, cross section

A valve basically consists of a housing (1), a control spool (2), a return spring (3) and a solenoid (5). It is designed to select which one of two circuits (C1 or C2) is to be supplied with the oil delivered from one single hose (P): with spool in position "0", when the solenoid is de-energized, the flow goes from P to C1, with spool in position "1", when the solenoid is energized the flow goes from P to C2.

With the coil de-energized, the return spring (3) pushes back the spool (2) and holds it in position "0".

The coil (5) is fastened to the tube by the ring nut (6).

The manual override (7) allows to shift the spool (2) also in case of voltage shortage.

An external drain (4), to be connected to tank, ensures shifting operations also at higher working pressure.

Hydraulic / pneumatic pilot control for spool shifting is available upon request.

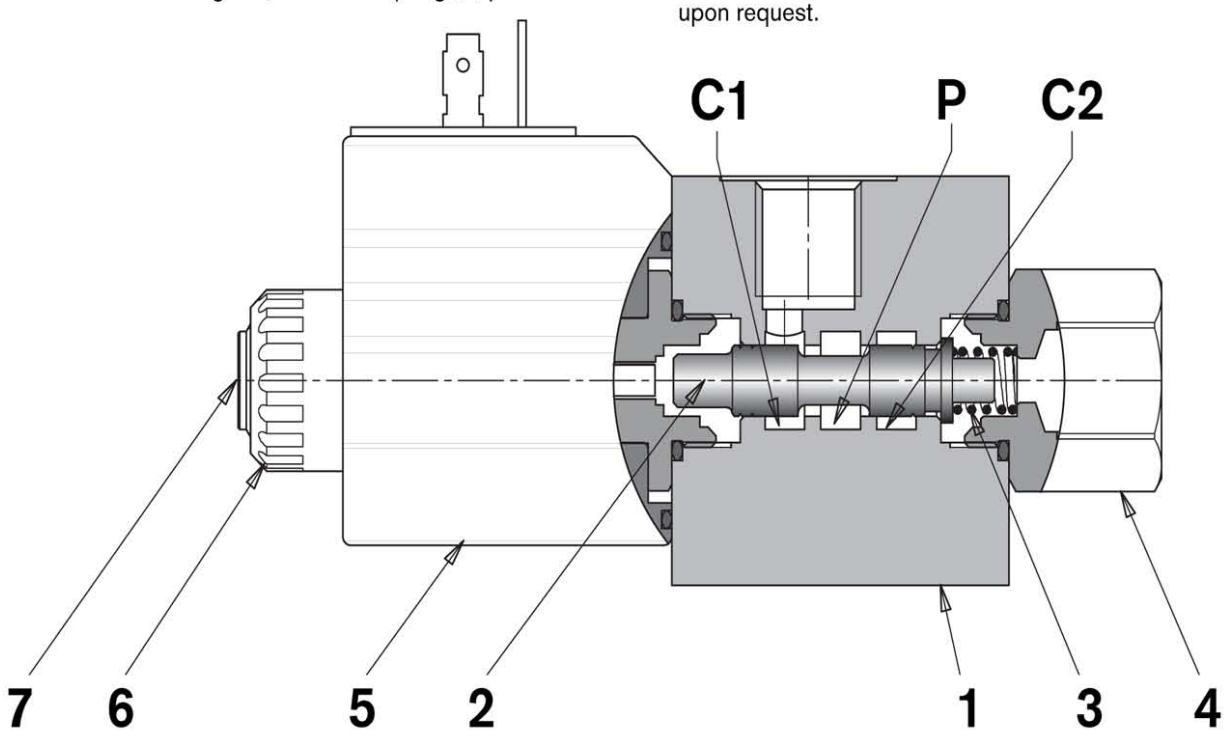

Technical Data (for applications with different specifications consult us)

General

Valve weight	kg *[lbs]*	0.89 *[1.960]*
Ambient Temperature	°C *[°F]*	−20....+50 *[-4....+122]* (NBR seals)

Hydraulic

Maximum pressure with external drain	bar *[psi]*	310 *[4500]*
Maximum pressure with internal drain	bar *[psi]*	250 *[3625]*
Maximum flow	l/min *[gpm]*	20 *[5.3]*
Hydraulic fluid General properties: it must have physical lubricating and chemical properties suitable for use in hydraulic systems such as, for example:		Mineral oil based hydraulic fluids HL (DIN 51524 part 1). Mineral oil based hydraulic fluids HLP (DIN 51524 part 2). For use of environmentally acceptable fluids (vegetable or polyglycol base) please consult us.
Fluid Temperature	°C *[°F]*	−20....+80 *[-4....+176]* (NBR seals)
Permissible degree of fluid contamination		ISO 4572: $\beta_x \geq 75$ X=12...15 ISO 4406: class 20/18/15 NAS 1638: class 9
Viscosity range	mm^2/s	5....420
Internal leakage with 100 bar *[1450 psi]* secondary pressure at C	cc/min *[in^3/min]*	min.7 *[0.43]* max. 15 *[0.74]*

Electrical

Voltage type		DC								
Voltage tolerance (nominal voltage)	%	-10 .... +10								
Duty		Continuous, with ambient temperature ≤ 50°C *[122°F]*								
Maximum coil temperature	°C *[°F]*	150 *[302]*								
Insulation class		H								
Compliance with		Low Voltage Directive LVD 73/23/EC (2006/95/EC), 2004/108/EC								
Coil weight with connection EN 175301-803	kg *[lbs]*	0.215 *[0.44]*								
Voltage	V	12	13	24	27	48	110			
Voltage type		DC	DC	DC	DC	DC	DC			
Power consumption	W	26	26	26	26	26	26			
Current [1]	A	2.15	2.00	1.10	1.00	0.54	0.27			
Resistance [2]	Ω	5.5	6.5	22	28	89	413			

[1] Nominal - [2] ± 7% at temperature 20°C *[68°F]*

	Voltage (V)	Connector type	Coil description	Marking	Coil Mat no.
=OB 01 **=OB 02**	12 DC	EN 175301-803 (Ex. DIN 43650)	C3601 12DC	12 DC	R933000044
=OB 03	12 DC	AMP JUNIOR	C3603 12DC	12 DC	R933000047
=OB 04	12 DC	AMP JUNIOR Horizontal	C3604 12DC	12 DC	R933002913
=OB 07	12 DC	DEUTSCH DT 04-2P	C3607 12DC	12 DC	R933000048
=OB 31	12 DC	Cable 350 mm long	C3631 12DC	12 DC	R933000045
=AD 01 **=AD 02**	13 DC	EN 175301-803 (Ex. DIN 43650)	C3601 13DC	13 DC	R933000051
=AD 07	13 DC	DEUTSCH DT 04-2P	C3607 13DC	13 DC	R933000049
=OC 01 **=OC 02**	24 DC	EN 175301-803 (Ex. DIN 43650)	C3601 24DC	24 DC	R933000053
=OC 03	24 DC	AMP JUNIOR	C3603 24DC	24 DC	R933000057
=OC 04	24 DC	AMP JUNIOR Horizontal	C3604 24DC	24 DC	R933002914
=OC 07	24 DC	DEUTSCH DT 04-2P	C3607 24DC	24 DC	R933000058
=OC 31	24 DC	Cable 350 mm long	C3637 24DC	24 DC	R933000055
=AC 01 **=AC 02**	27 DC	EN 175301-803 (Ex. DIN 43650)	C3601 27DC	27 DC	R933000056
=AC 07	27 DC	DEUTSCH DT 04-2P	C3607 27DC	27 DC	R933000050
=OD 01 **=OD 02**	48 DC	EN 175301-803 (Ex. DIN 43650)	C3601 48DC	48 DC	R933000059
=OD 04	48 DC	AMP JUNIOR Horizontal	C3604 48DC	48 DC	R933002915
=OE 01 **=OE 02**	110 DC	EN 175301-803 (Ex. DIN 43650)	C3601 110DC	110 DC	R933000061

Characteristic curves

Measured with hydraulic fluid ISO-VG32 at 45° ± 5° C *[113° ± 9° F]*; ambient temperature 20° C *[68° F]*.

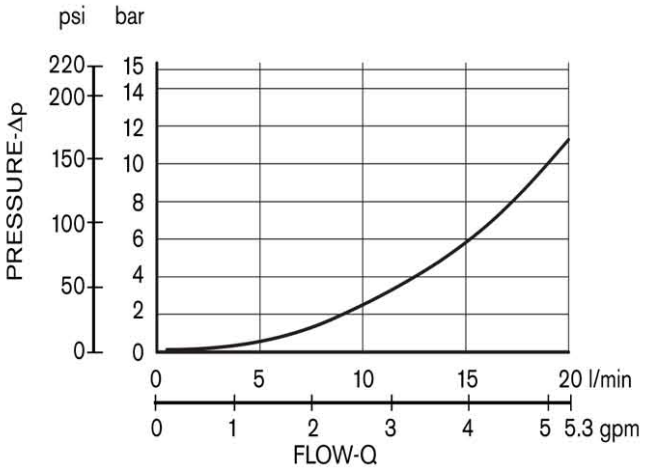

Performances limits

The performance limits refer to the following conditions: coils at operating temperature, voltage supply 10% below nominal, no back pressure in the tank line.

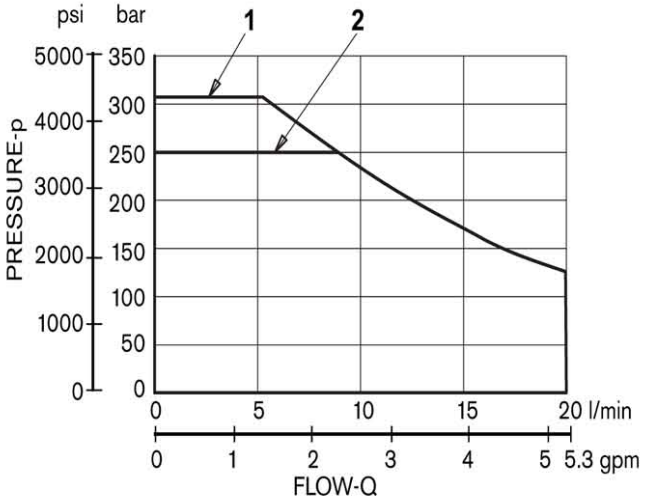

Curve n.	Drain type
1	External (-E-)
2	Internal (-I-)

External Dimensions and Fittings

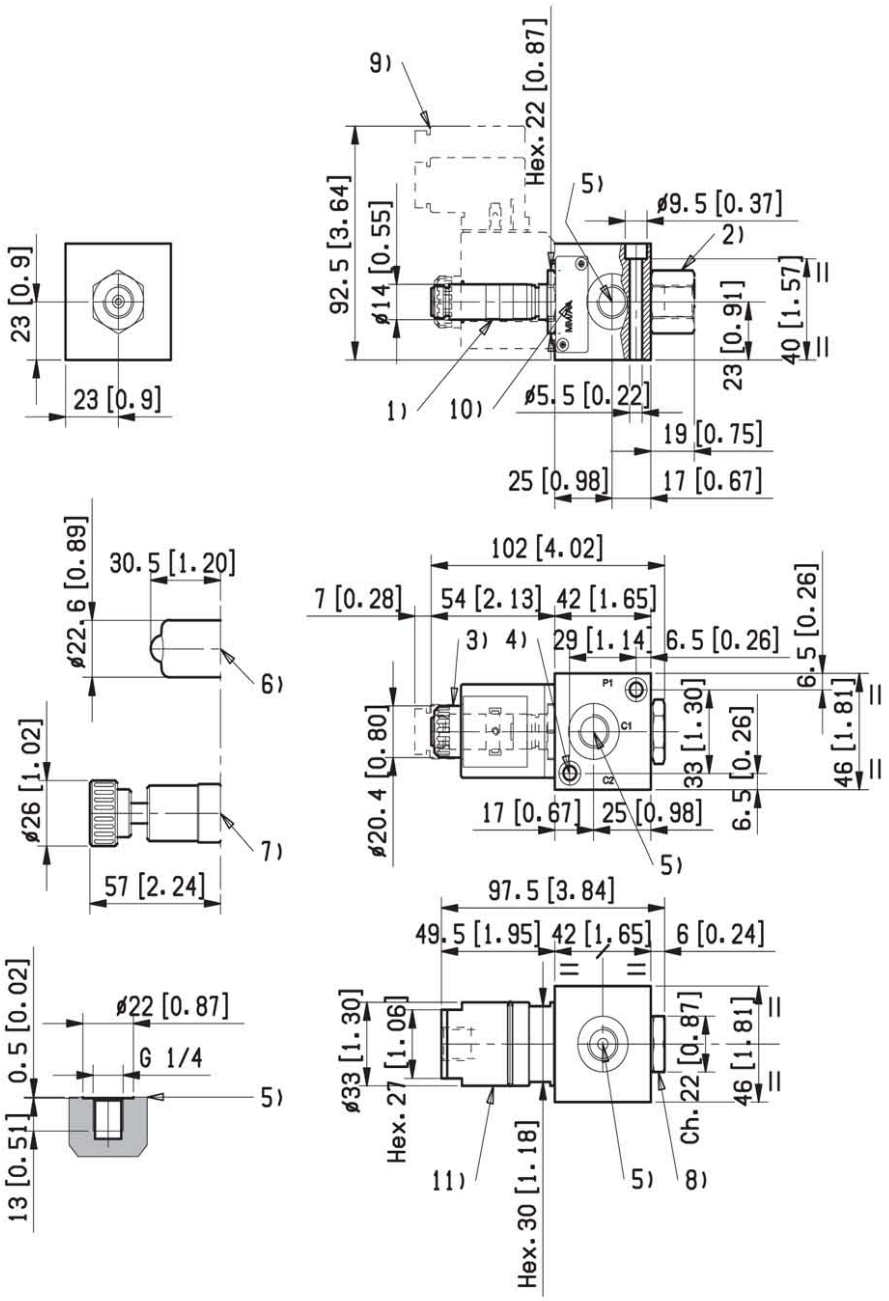

1 Solenoid tube hex 22 mm. Torque 20-22Nm *[14.7-16.2 ft-lb].*

2 Plug for version with external drain hex 22 mm. Torque 20-22Nm *[14.7-16.2 ft-lb].*

3 Ring nut for coil locking OD 20,4 mm *[8 in].* Torque 3 – 4 Nm *[2.2 – 3.0 ft-lb].*

4 Two through holes for installation. Recommended screws M5 with strength class DIN 8.8. Torque 5-6Nm*[3.6-4.4 ft-lb].*

5 Ports P, C1, C2, External drain, hydraulic/pneumatic pilot port G 1/4.

6 Optional push-button type emergency for spool opening: it is pressure stuck to the ring nut 5-6Nm *[3.7-4.4 ft-lb]* for coil locking. Mat no. R933000042.

7 Optional screw type emergency for spool opening: it is screwed torque 6-7Nm *[4.4-5.2 ft-lb]* to the tube as replacement of the coil ring nut. Mat no. R933000021 .

8 Plug for version with internal drain hex 22 mm. Torque20-22Nm *[14.7-16.2 ft-lb].*

9 Minimum clearance needed for connector removal.

10 Identification label.

11 Hydraulic, or pneumatic pilot connector: hex 30 mm. Torque 20-22 Nm *[14.7-16.2 ft-lb].*

Electric connection

=00

Without coils, but with ring nut and O-Rings for coil fitting (solution recommended for flexible stock handling)

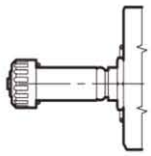

=01

With coils having plug-in pins EN 175301-803, without connectors

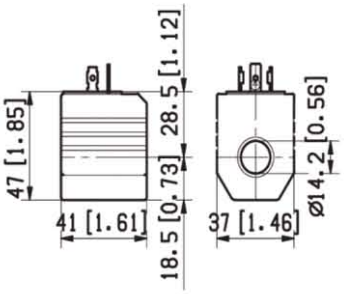

=02

With coils and with connectors non-assembled, type EN 175301-803.

Protection class: IP 65 when connector with seal is properly screwed down, and cable clamp is correctly tightened.

182-09: Standard.
182-LED-T-A1: with LED monitoring presence of voltage.
182-09-G-DO-2-1: with VDR (Voltage Dependent Resistor), to prevent input voltage over-shootings.

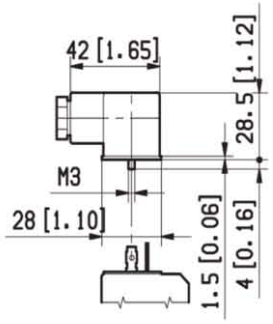

Mat. No.	Description
R933002885	182-09 GRAY
R933002889	182-09 BLACK
R933002893	182-LED-T-A1 12 DC
R933002894	182-LED-T-A1 24 DC
R933002896	182-LED-T-A1 48 DC
R933002897	182-LED-T-A1 110 DC
R933002886	182-09-G-DO-2-1 12DC with VDR
R933002887	182-09-G-DO-2-1 24DC with VDR

=03

With coils having AMP Junior connector, and with bi-directional diode.

Protection class: IP 65 with female connector properly fitted (see drawing).

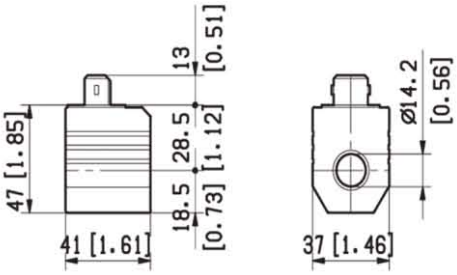

=04

With coils having Horizontal AMP Junior connector, and with bi-directional diode.

Protection class: IP 65 with female connector properly fitted (see drawing).

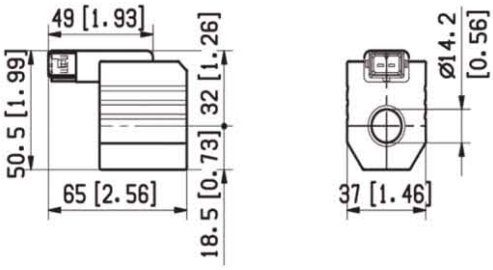

=31

With coils having bi-directional diode and bipolar sheathed free lead, 350 mm long, without pins.

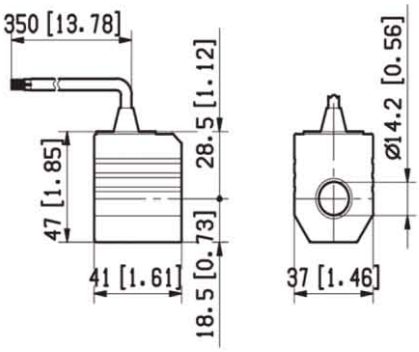

=07

With coils having DEUTSCH DT 04-2P connector, and with bi-directional diode.

Protection class: IP 69 K with female connector properly fitted (see drawing).